Cambridge Assessment International Education
Cambridge International General Certificate of Secondary Education

CANDIDATE NAME	

CENTRE NUMBER						CANDIDATE NUMBER					

DESIGN AND TECHNOLOGY **0445/43**

Paper 4 Systems and Control **May/June 2019**

1 hour

Candidates answer on the Question Paper.

No Additional Materials are required.

READ THESE INSTRUCTIONS FIRST

Write your centre number, candidate number and name on all the work you hand in.
Write in dark blue or black pen.
You may use an HB pencil for any diagrams or graphs.
Do not use staples, paper clips, glue or correction fluid.
DO **NOT** WRITE IN ANY BARCODES.

Section A
Answer **all** questions in this section.

Section B
Answer **one** question in this section.

You may use a calculator.

At the end of the examination, fasten all your work securely together.
The number of marks is given in brackets [ ] at the end of each question or part question.
The total of the marks for this paper is 50.

This document consists of **20** printed pages and **4** blank pages.

© UCLES 2019

Section A

Answer **all** questions in this section.

1 Fig. 1 shows safety symbols that could be found in a workshop.

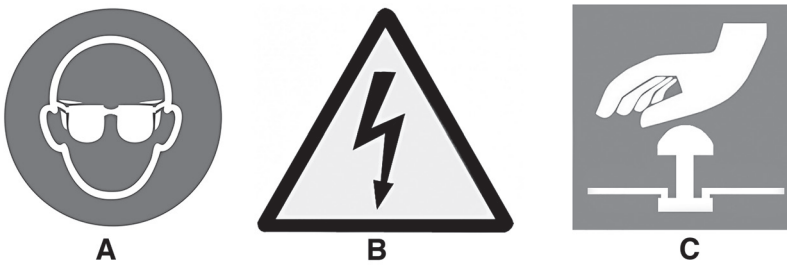

Fig. 1

State the meaning of each symbol.

A .....

B .....

C .....
[3]

2 Give **one** example of each of the energy sources named below.

Renewable energy .....

Fossil fuel .....
[2]

3 Fig. 2 shows two types of joint that can be used for joining a chair rail to a leg.

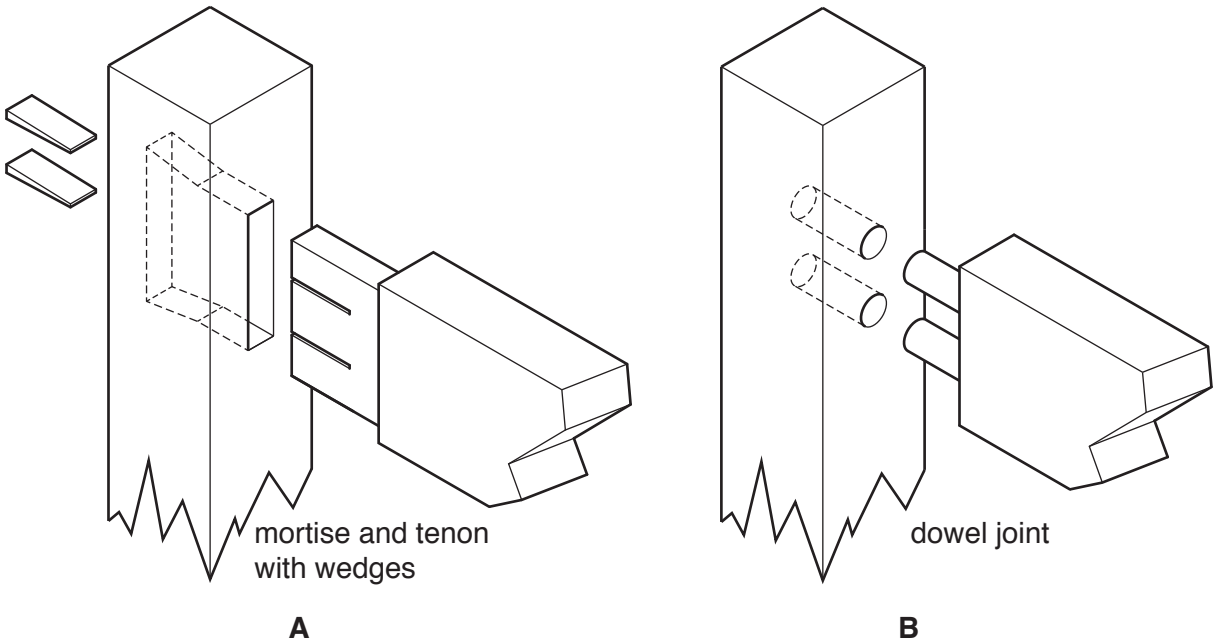

Fig. 2

(a) Explain why joint **A** will resist tensile force better than joint **B**.

.....

.....

.....

..... [2]

(b) Explain why joint **A** will resist shear force better than joint **B**.

.....

.....

.....

..... [2]

4 Steel plates on a building structure can be joined together using temporary or permanent methods.

(a) Give **one** temporary method of joining two steel plates together.

..... [1]

(b) Give **one** permanent method of joining two steel plates together.

..... [1]

5 State what is meant by ‘static load’ on a bridge.

..... [1]

6 **(a)** Give **one** specific use for each of the following types of gear.

Bevel gear .....

.....

Rack and pinion .....

.....

Worm gear .....

.....
[3]

(b) Fig. 3 shows a rack and pinion gear system.

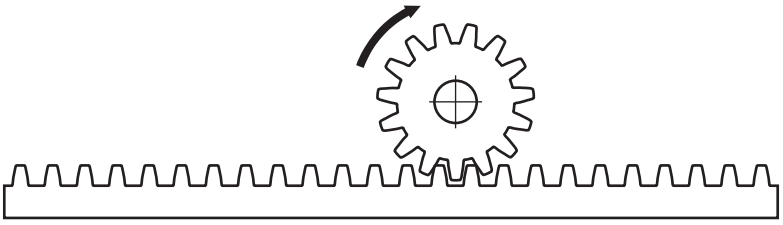

Fig. 3

Describe a change to the system that will allow the direction of movement of the rack to be reversed with the pinion still rotating in the same direction.

.....

.....

..... [2]

7 Use sketches and notes to show what is meant by a compound gear arrangement.

[2]

8 **(a)** Fig. 4 shows the outline of an IC.

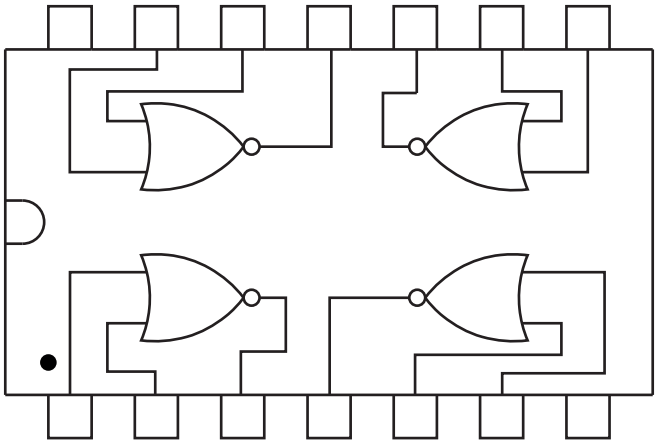

Fig. 4

Add pin numbers to the outline. [2]

(b) Using the data in the table state the number of the IC shown in Fig. 4.

IC description	IC number
Quad 2-input NAND gate	4011B
Quad 2-input OR gate	4071B
Quad 2-input NOR gate	4001B
Quad 2-input XOR gate	4070B

..... [1]

(c) Complete Fig. 5 to show how an LED could be connected to indicate the logic level of the logic gate output.

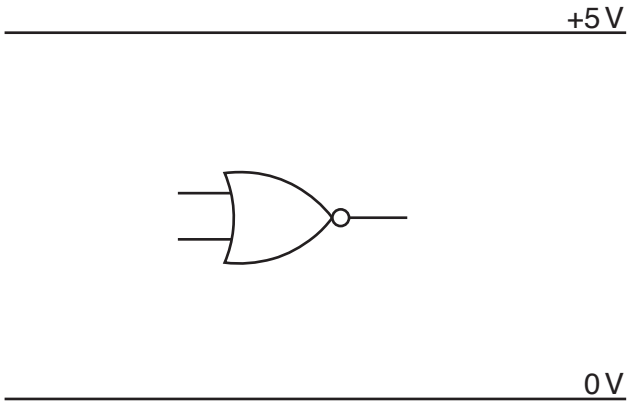

Fig. 5

[3]

Section B

Answer **one** question from this section.

9 **(a)** Fig. 6 shows a model truss bridge that has been made in a school to span a 270 mm gap.

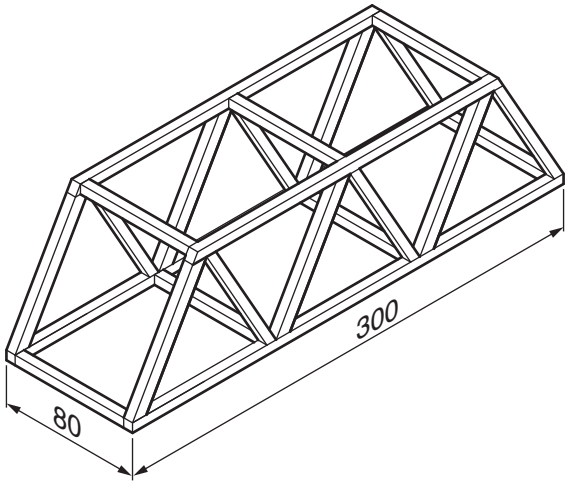

Fig. 6

Use sketches and notes to show how the model truss bridge can be tested.

[3]

(b) Fig. 7 shows an arch bridge built using stone.

Fig. 7

(i) State the name of this type of structure.

..... [1]

(ii) Describe, using an example, how this type of structure gains its strength.

.....

.....

..... [2]

(iii) Fig. 8 shows an arch similar to those in Fig. 7.

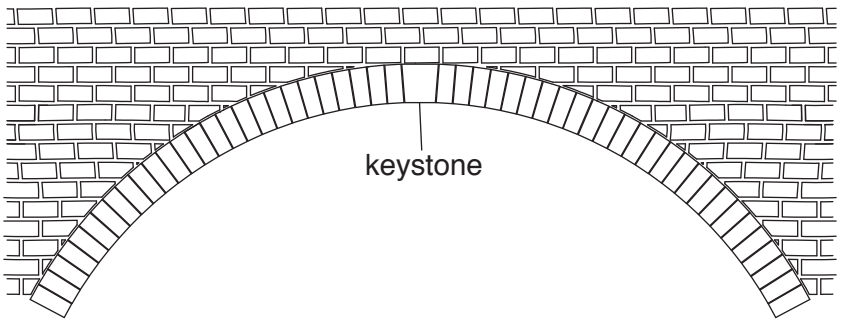

Fig. 8

State the purpose of the keystone.

.....

..... [1]

(iv) Stone is a natural material that is used in construction work.
Give **two** advantages of stone compared to concrete.

1 .....

2 .....
[2]

(v) Give **two** advantages of concrete compared to stone.

1 .....

2 .....
[2]

(c) Fig. 9 shows part of the underside of a wooden aircraft wing with the canvas covering removed from the lower surface of the wing.

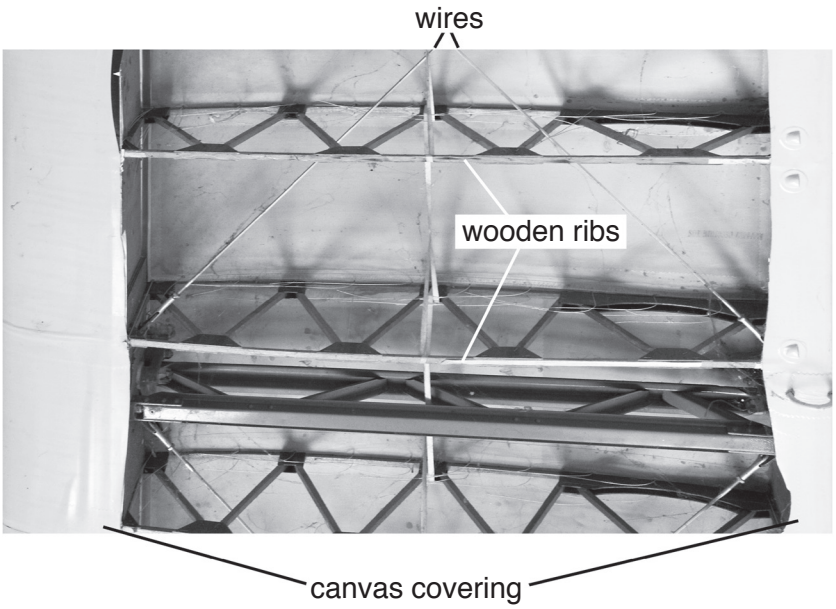

Fig. 9

(i) State **two** methods of strengthening that can be seen in Fig. 9.

1 .....

2 .....
[2]

(ii) Explain why wood is a suitable choice of material for the wing structure.

.....

.....

..... [2]

(iii) Describe **two** factors that should be considered when selecting wood for any structure.

.....

.....

.....

..... [2]

(d) Fig. 10 shows a car park barrier that lifts to allow a car to enter.

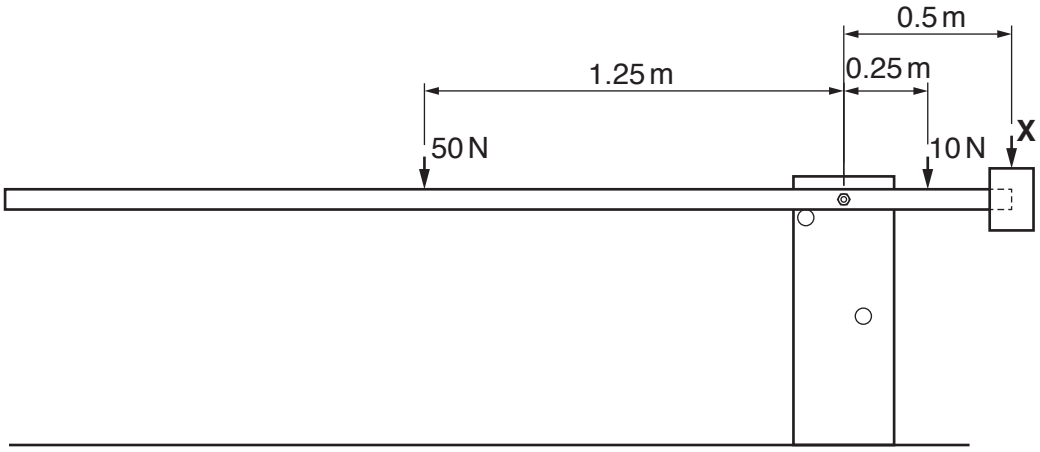

Fig. 10

Calculate the value of force **X** that will keep the barrier in equilibrium.

.....

.....

.....

..... [3]

(e) A steel cable used to pull a car onto the back of a breakdown truck has an original length of 10 m.
The cable stretches by 1.3 mm when the cable starts to pull.

(i) Calculate the strain in the cable.

.....

.....

..... [2]

(ii) State the type of strain that occurs in the cable.

..... [1]

(iii) The ‘elastic limit’ of the cable is important to the manufacturer when deciding the maximum load that can be placed on the cable.
Explain what is meant by elastic limit.

.....

.....

..... [2]

10 Fig. 11 shows a 'sit-on' toy digger for a child.
The digger is operated by two levers, **A** and **B**.
Lever **A** controls the angle of the scoop and lever **B** will raise and lower the scoop.

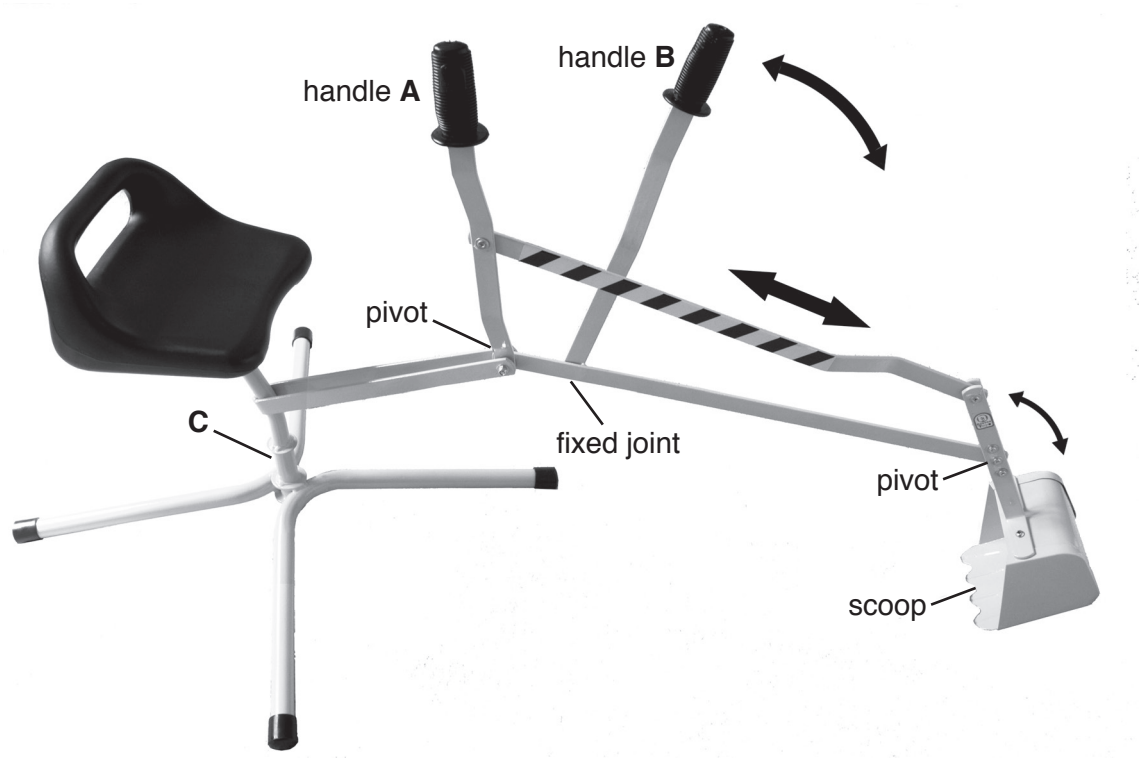

Fig. 11

(a) **(i)** State the class of lever operated by handle **A**.

..... [1]

(ii) State the class of lever operated by handle **B**.

..... [1]

(iii) Describe the result of pushing forward on handle **A**.

.....

.....

..... [2]

(iv) The seat and mechanism rotate at point **C**.
Use sketches and notes to show how point **C** could be designed to provide support and allow for rotation.
Name all components and materials used.

[4]

(b) Two types of jack are shown in Fig. 12.

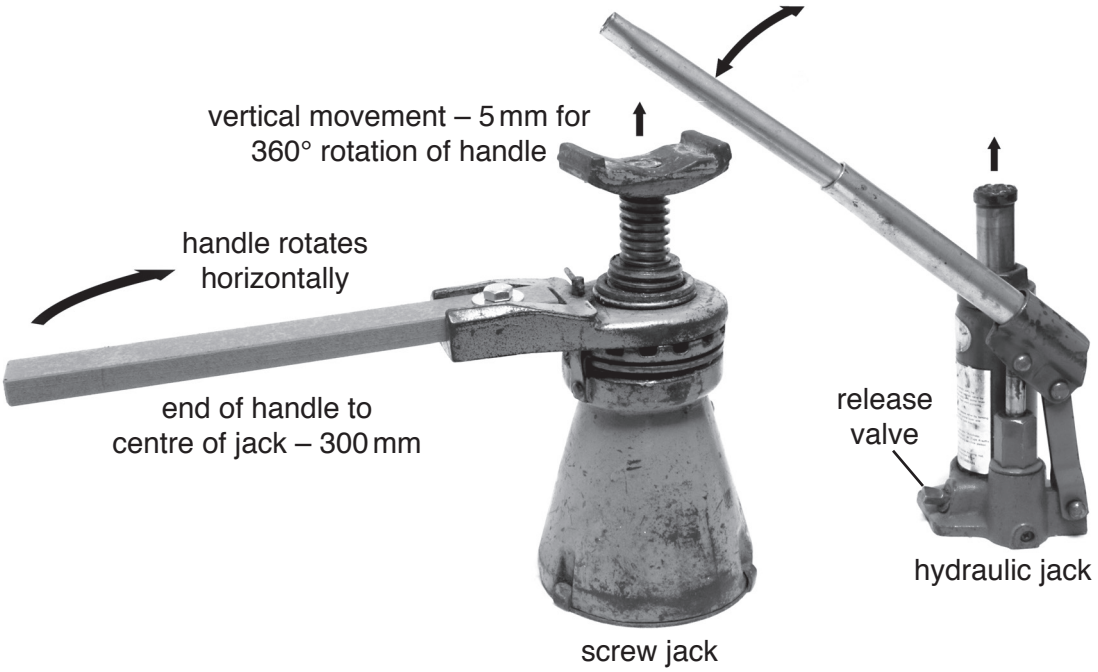

Fig. 12

(i) State the conversion of motion used in the hydraulic jack.

..... to ..... [2]

(ii) Describe the purpose of the release valve in a hydraulic jack.

.....

.....

..... [2]

(iii) Calculate the mechanical advantage given by the screw jack.

Use the formula *circumference* = $2 \pi r$ for the distance moved by the handle for one full rotation.

.....

.....

.....

..... [3]

(iv) Fig. 13 shows the ratchet and pawl mechanism used on the screw jack operating handle.

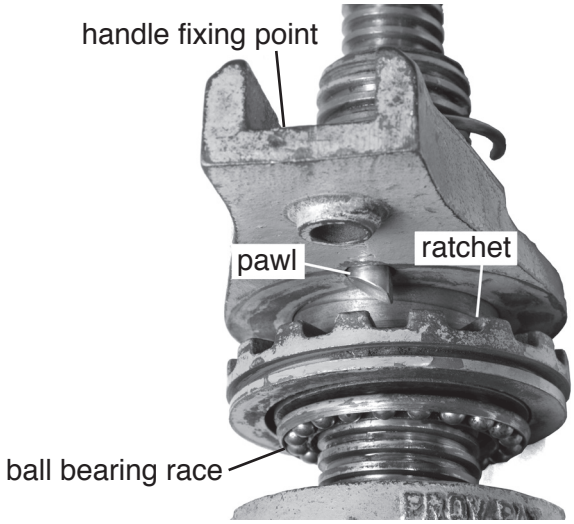

Fig. 13

Explain why this mechanism is used.

.....

.....

..... [2]

(v) Give **two** other uses for a ratchet and pawl mechanism.

1 .....

2 .....

[2]

(vi) Explain why the ball bearing race will improve the efficiency of the jack.

.....

.....

..... [2]

(c) **(i)** Use sketches and notes to show what is meant by the pitch of a thread.

[2]

(ii) Screw threads are often used in measuring instruments such as the micrometer shown in Fig. 14.

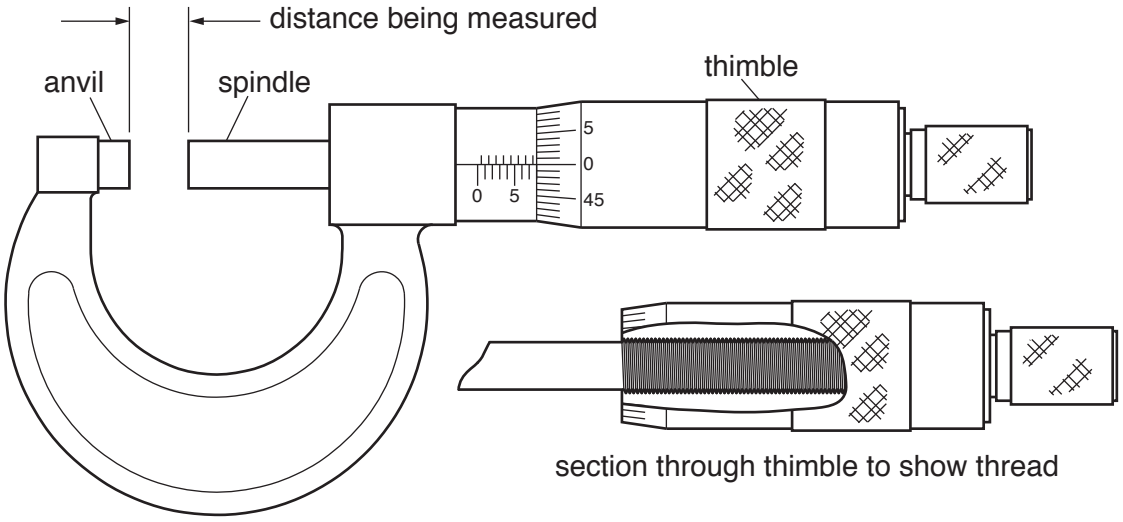

Fig. 14

Two rotations of the micrometer thimble will result in the gap between the anvil and spindle moving 1 mm.
State the pitch of the thread used in the micrometer.

..... [1]

(d) Fig. 15 shows part of the gear system from a rechargeable electric drill.

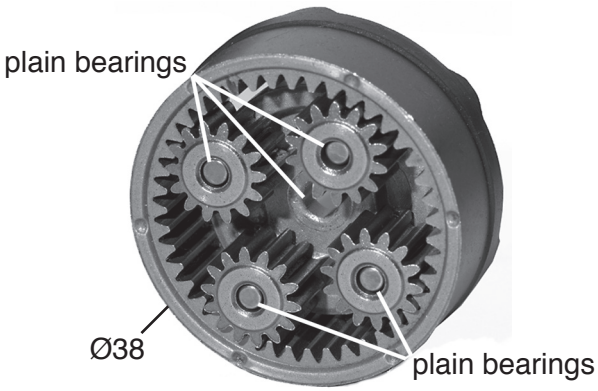

Fig. 15

Give **one** reason why plain bearings are suitable for the gear system.

.....

..... [1]

BLANK PAGE

11 **(a)** Fig. 16 shows four components and their symbols.
For each of these components it is important to know which way round the component should be inserted into a circuit.

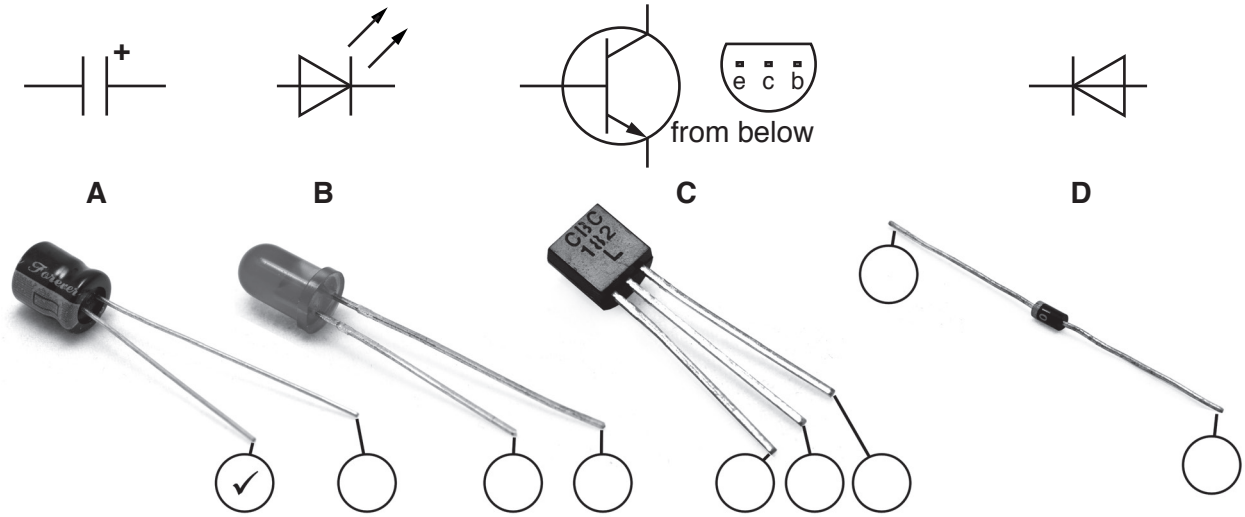

Fig. 16

(i) Put a tick (✓) in the circle connected to the cathode or negative leg of each component. Component **A** has been done for you. [3]

(ii) State which of these components may be intentionally placed the 'wrong way round' in a circuit.

..... [1]

(b) Fig. 17 shows a circuit for warning drivers when the outside temperature falls below 5 °C.

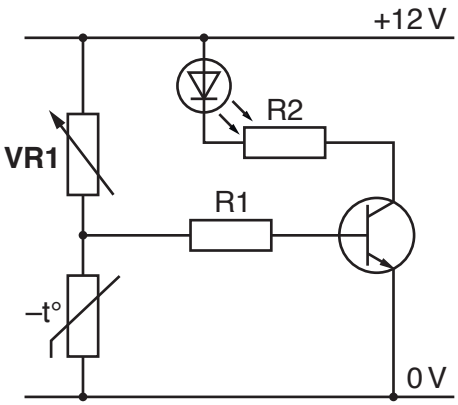

°C	Resistance kΩ
–10	106
–5	85
0	63
5	51
10	39
15	32

Fig. 17

(i) Explain why **VR1** is used rather than a fixed resistor.

.....

.....

..... [2]

(ii) The table in Fig. 17 shows details of the resistance of the thermistor at different temperatures. The tolerance of the thermistor is 15%.
Give the range of resistance values that could be expected at 5 °C in a batch of thermistors.

.....

.....

.....

.....

..... [3]

(iii) State what the effect on the resistance reading would be if the thermistor, at room temperature before the test, is held between warm fingers.

.....

..... [1]

(iv) Fig. 18a shows the current flow through the thermistor being measured using a multimeter.

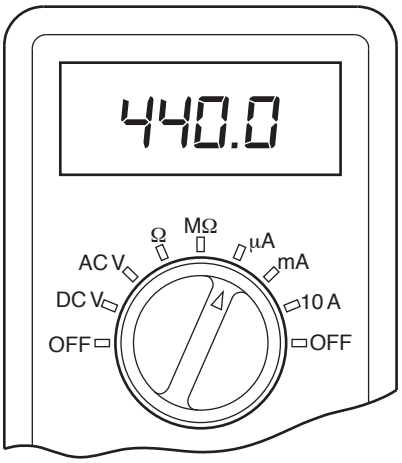

Fig. 18a

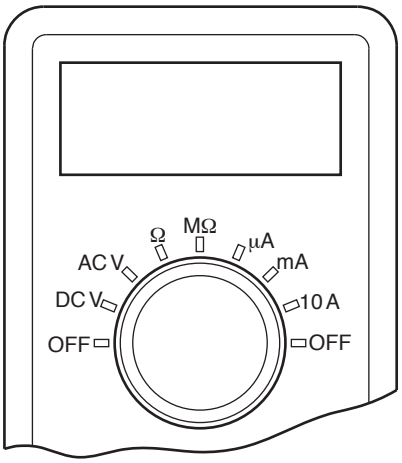

Fig. 18b

Complete Fig. 18b to show the following:

- the multimeter dial turned to milliamps
- the reading in Fig. 18a converted to milliamps. [2]

(c) A logic circuit gives a warning when car lights have been left on.
The logic circuit has three inputs as shown in the table.

input 1	lights
input 2	engine
input 3	driver's door

Fig. 19 shows the PCB layout and part of the circuit diagram.

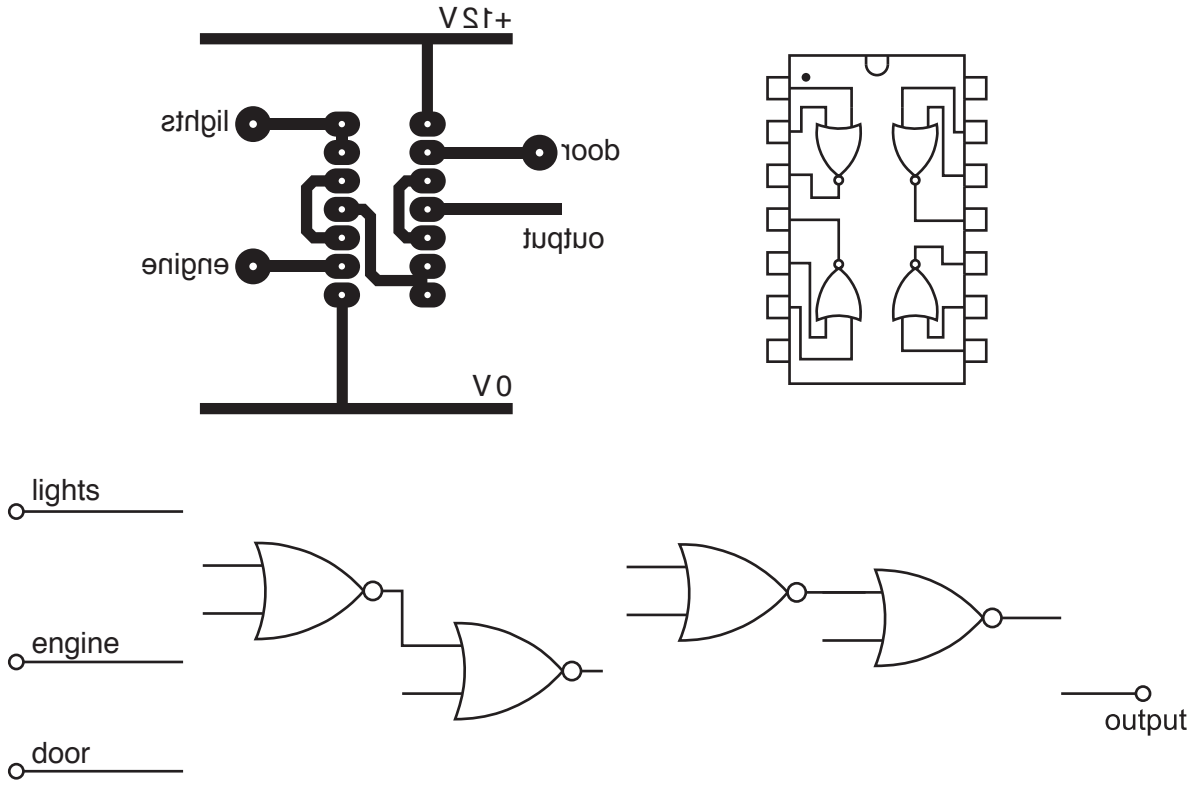

Fig. 19

(i) Give the reason for the writing on the PCB layout being mirrored.

..... [1]

(ii) Describe how the PCB layout could be improved to ensure that the IC is inserted correctly.

.....

.....

..... [2]

(iii) Add connections to Fig. 19 to complete the circuit diagram for the logic gates. [4]

(d) A design for a low voltage paper shredder needs a relay circuit to reverse the motor when the shredder gets paper jammed in it.
The motor voltage is 12 V. The control circuit voltage is 6 V.

(i) The contacts on the relay are DPDT.
Give the full name of this abbreviation.

..... [3]

(ii) The switched output voltage for the shredder is 12 VDC.
Calculate the maximum power rating of the motor if a 5 A fuse is used on the output of the circuit.

.....

.....

..... [2]

(iii) State the order code for a suitable relay from the table below.

order code	coil voltage	contact rating	contact arrangement
20-1534	6 V	5 A	SPST
20-1026	12 V	6 A	SPDT
20-4310	6 V	6 A	DPDT
20-5525	5 V	1 A	DPST
20-9195	12 V	10 A	DPDT

..... [1]

BLANK PAGE

BLANK PAGE

BLANK PAGE

Permission to reproduce items where third-party owned material protected by copyright is included has been sought and cleared where possible. Every reasonable effort has been made by the publisher (UCLES) to trace copyright holders, but if any items requiring clearance have unwittingly been included, the publisher will be pleased to make amends at the earliest possible opportunity.

To avoid the issue of disclosure of answer-related information to candidates, all copyright acknowledgements are reproduced online in the Cambridge Assessment International Education Copyright Acknowledgements Booklet. This is produced for each series of examinations and is freely available to download at www.cambridgeinternational.org after the live examination series.

Cambridge Assessment International Education is part of the Cambridge Assessment Group. Cambridge Assessment is the brand name of the University of Cambridge Local Examinations Syndicate (UCLES), which itself is a department of the University of Cambridge.

© UCLES 2019